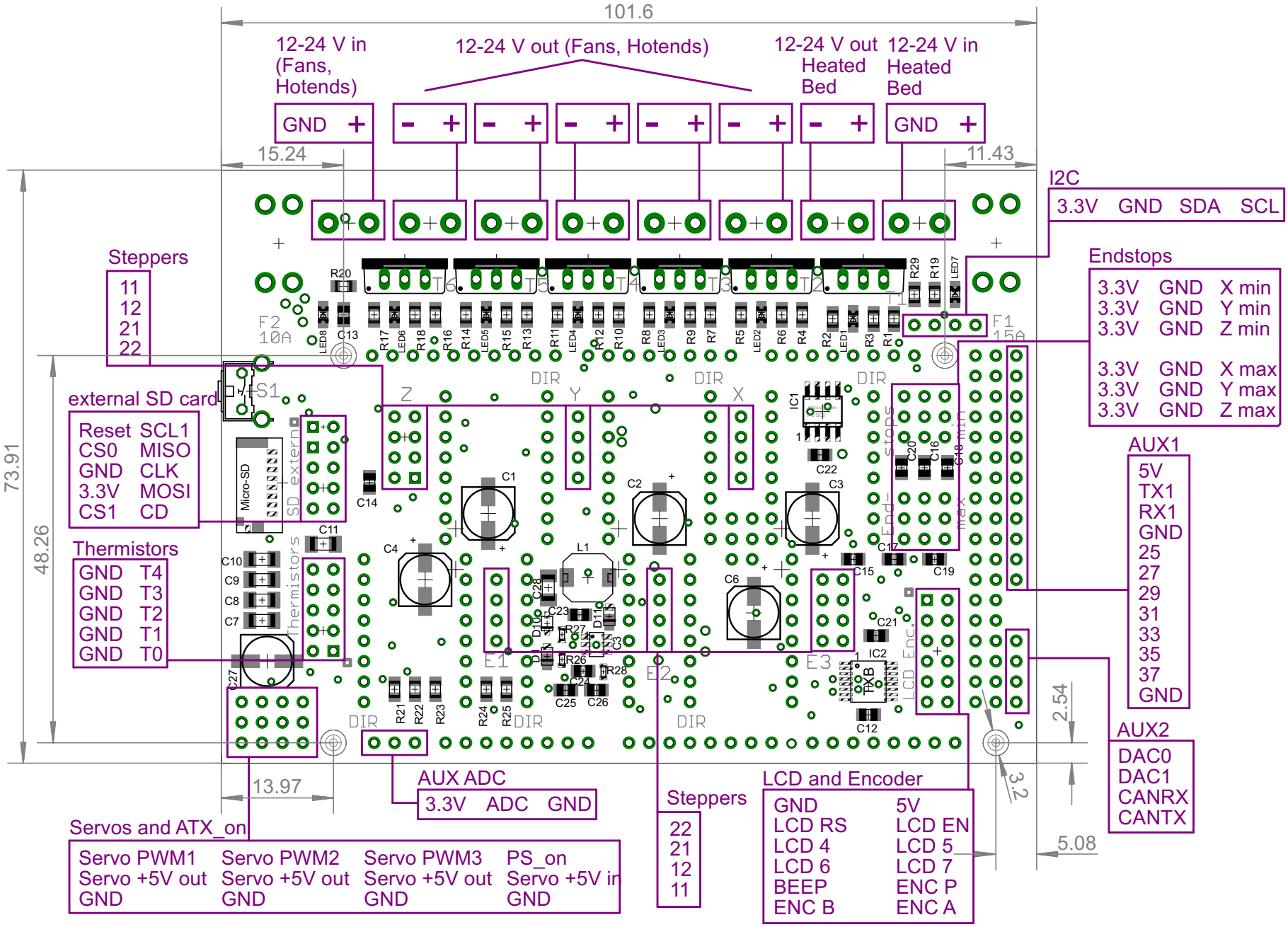
101.6
12-24 V in (Fans, Hotends)
12-24 V out (Fans, Hotends)
12-24 V out Heated Bed
12-24 V in Heated Bed
GND +
- +
- +
- +
- +
- +
- +
GND +
15.24
11.43
I2C
3.3V GND SDA SCL
Steppers
11
12
21
22
Endstops
3.3V GND X min
3.3V GND Y min
3.3V GND Z min
3.3V GND X max
3.3V GND Y max
3.3V GND Z max
external SD card
Reset SCL1
CS0 MISO
GND CLK
3.3V MOSI
CS1 CD
Thermistors
GND T4
GND T3
GND T2
GND T1
GND T0
AUX1
5V
TX1
RX1
GND
25
27
29
31
33
35
37
GND
AUX2
DAC0
DAC1
CANRX
CANTX
73.91
48.26
13.97
2.54
3.2
5.08
AUX ADC
3.3V ADC GND
Steppers
22
21
12
11
LCD and Encoder
GND 5V
LCD RS LCD EN
LCD 4 LCD 5
LCD 6 LCD 7
BEEP ENC P
ENC B ENC A
Servos and ATX_on
Servo PWM1 Servo PWM2 Servo PWM3 PS_on
Servo +5V out Servo +5V out Servo +5V out Servo +5V in
GND GND GND GND